17.3 Exercises - Damped and forced oscillation, resonance

1. A student sets up the apparatus illustrated in Fig. in order to investigate the oscillations of a metal cube suspended on a spring.

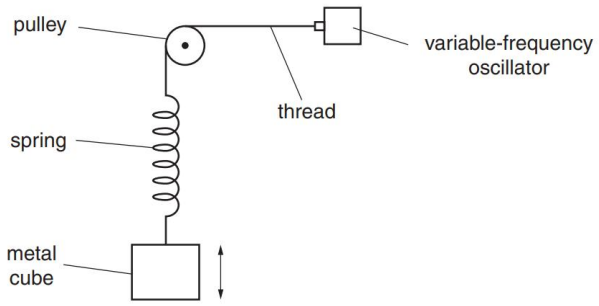

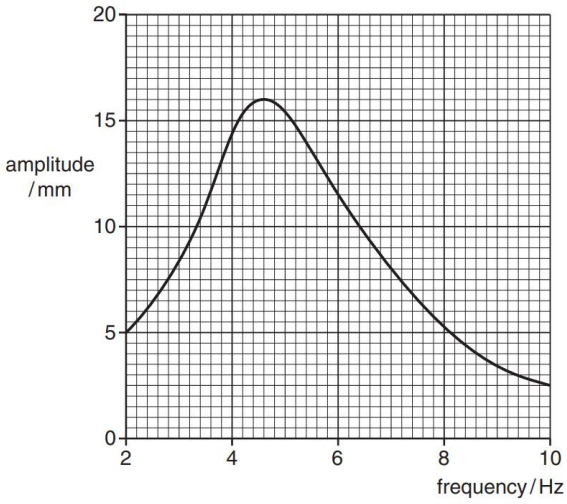

a.

i. State the phenomenon illustrated in Fig. 3.2.

.....[1]

ii. For the maximum amplitude of vibration, state the magnitudes of the amplitude and the frequency.

amplitude = ... mm

frequency = ... Hz[1]

b. The oscillations of the metal cube of mass 150 g may be assumed to be simple harmonic. Use your answers in (a)(ii) to determine, for the metal cube,

i. its maximum acceleration,

acceleration = ...ms^{-2} [3]

ii. the maximum resultant force on the cube.

force = ...N [2]

c. Some very light feathers are attached to the top surface of the cube so that the feathers extend outwards, beyond the vertical sides of the cube.

The investigation is now repeated.

On Fig. 3.2, draw a line to show the new variation with frequency of the amplitude of vibration for frequencies between 2Hz and 10 Hz. [2]

2.

a. State natural frequency and forced frequency.

1. .....

.....

2. .....

..... [2]

b. A trolley of mass 950g is held on a horizontal surface by means of two springs attached to fixed points P and Q, as shown in Fig.

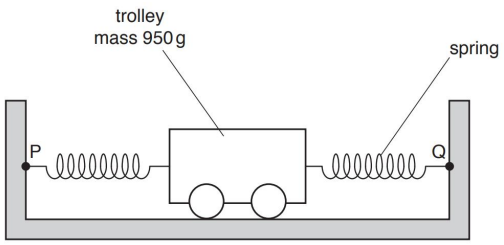

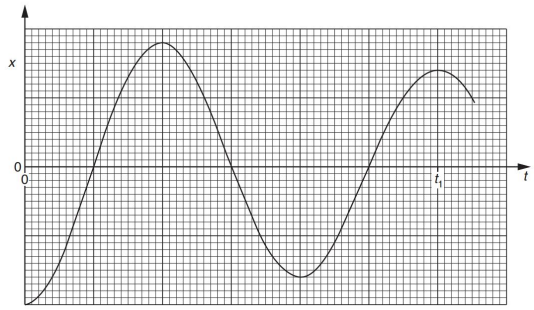

The springs, each having a spring constant k of $230 Nm^{-1}$, are always extended.

The trolley is displaced along the line of the springs and then released.

The variation with time t of the displacement x of the trolley is shown in Fig.

i.

a) State and explain whether the oscillations of the trolley are heavily damped, critically damped or lightly damped.

.....[1]

b) Suggest the cause of the damping.

.....

.....

.....[3]

ii. The acceleration a of the trolley of mass m may be assumed to be given by the expression

$$a = -\left(\frac{2k}{m}\right)x.$$

a) Calculate the angular frequency ω of the oscillations of the trolley.

ω = ...rad s^{-1} [3]

b) Determine the time t1 shown on Fig.

t_1 = ...s [2]